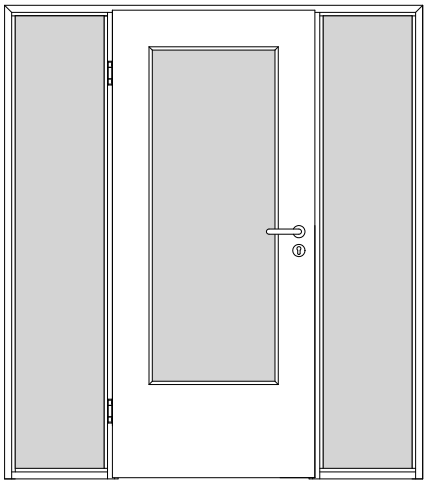

A_SD_TB-ST-1FLG_WF2_GEF_SD-32-LA.PDF

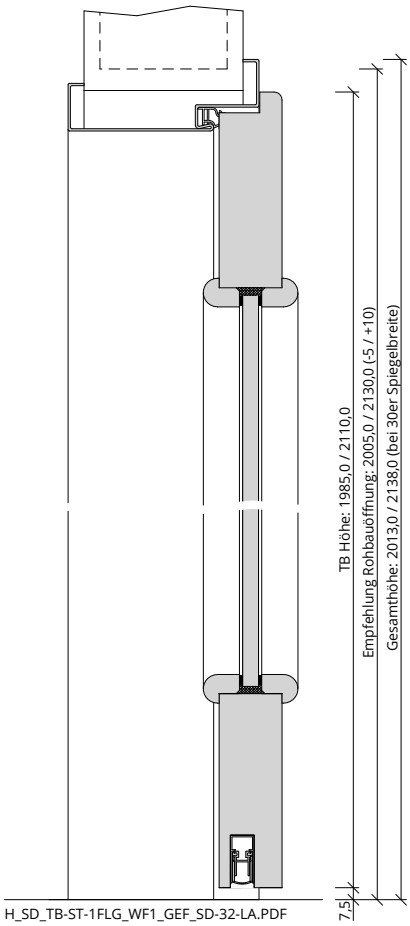

H_SD_TB-ST-1FLG_WF1_GEF_SD-32-LA.PDF

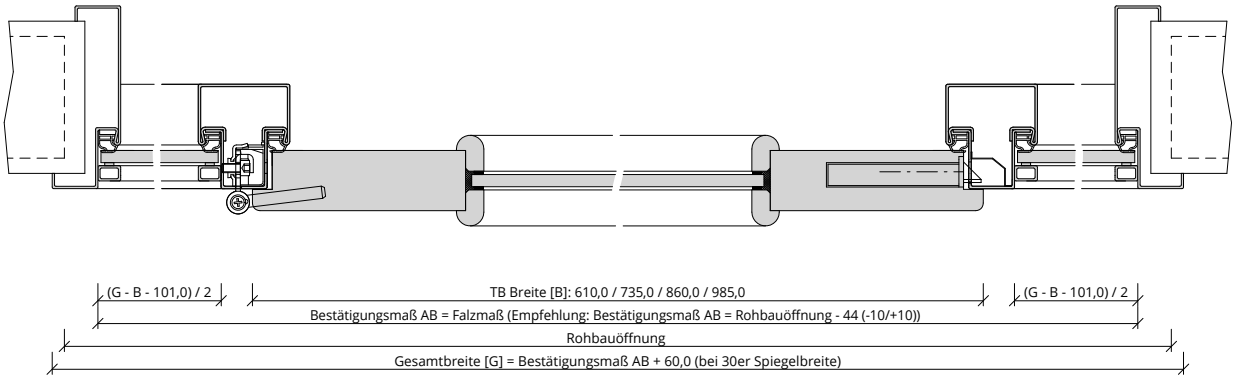

Q_SD_TB-ST-1FLG_WF2_GEF_SD-32-LA.PDF